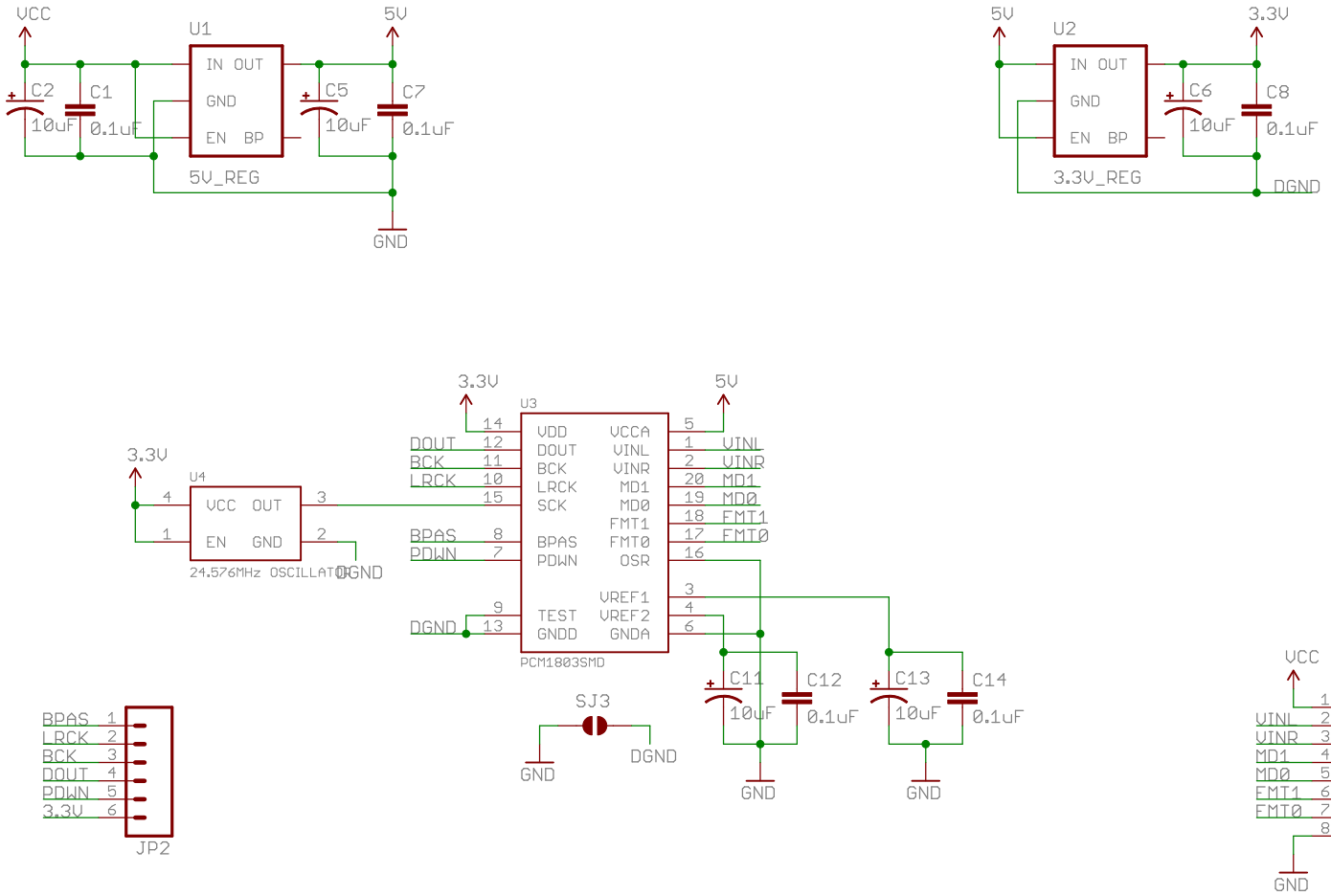

	SFE	SFE
TITLE: PCM1803A_Breakout-v11		
Document Number:	REV:	
Date: 9/18/2009 1:59:09 PM	Sheet: 1/1	