Orangutan X2 Robot Controller Schematic Diagram

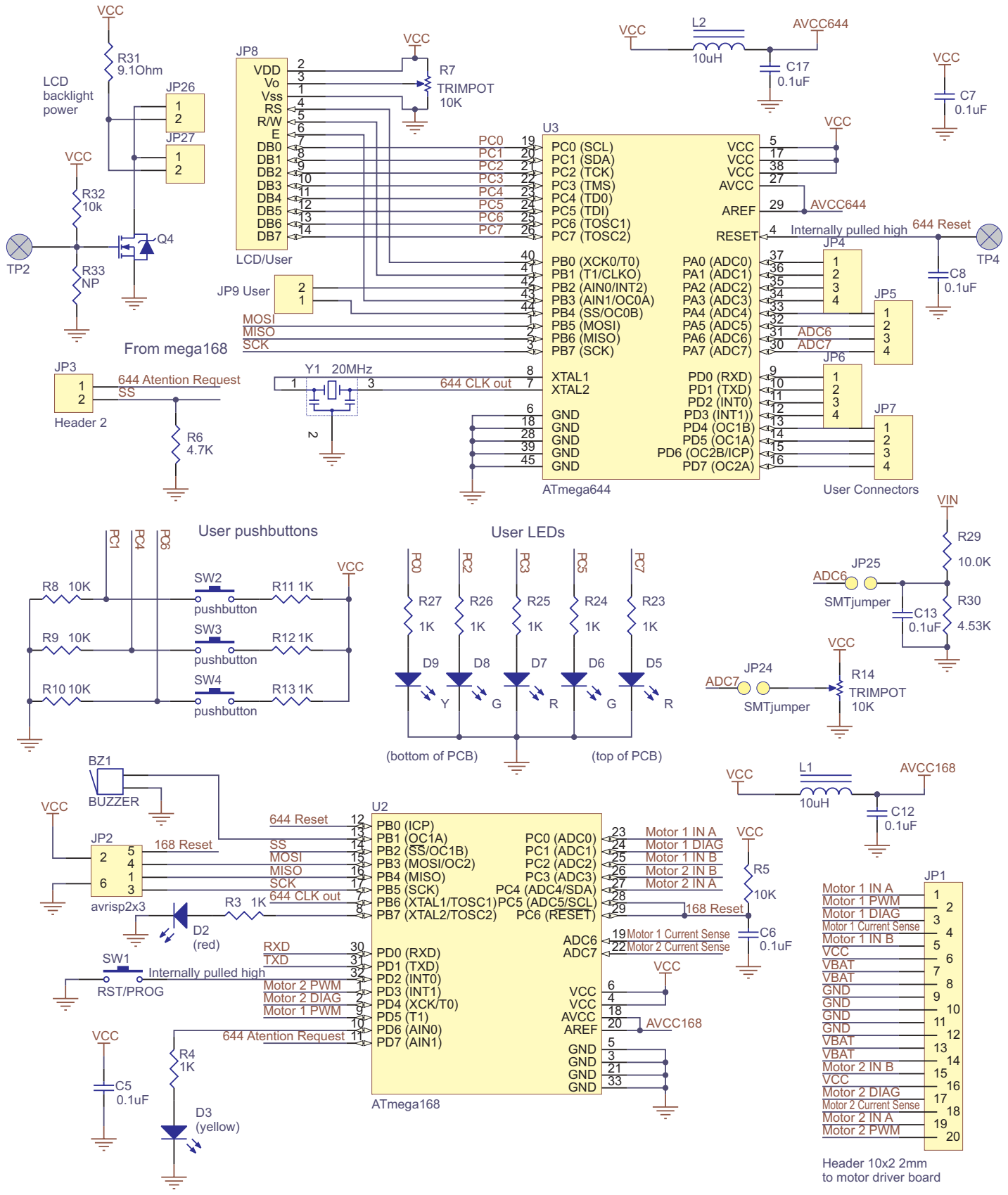

© 2007 Pololu Corporation
http://www.pololu.com/

org03a

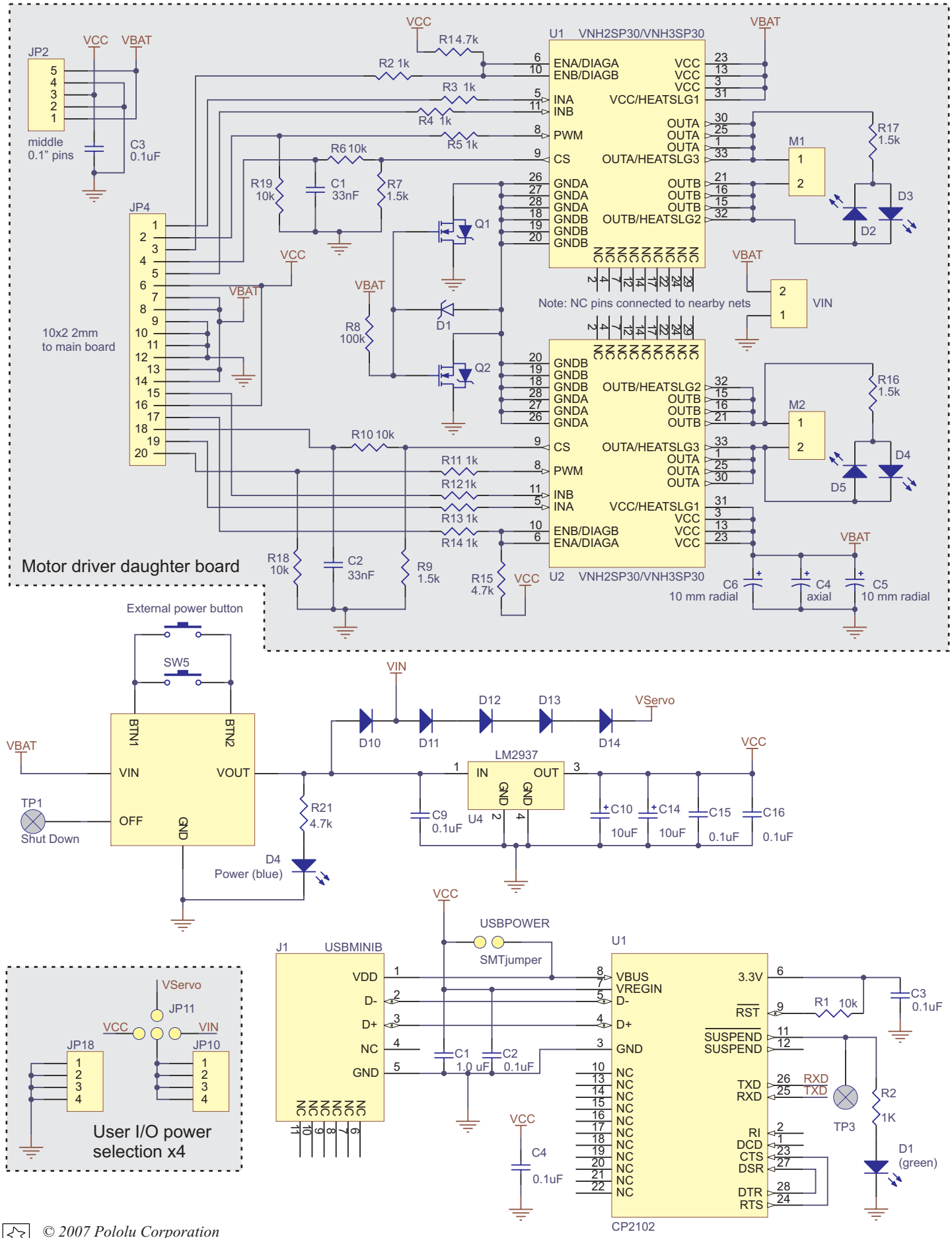

© 2007 Pololu Corporation
http://www.pololu.com/